SPEC SHEET

AS355 TWIN SQUIRREL

McDERMOTT AVIATION







VERSATILE TWIN-ENGINE UTILITY HELICOPTER

The AS355F1 Twin Squirrel is a versatile twin-engine light helicopter suited to lifting and construction, aerial survey, passenger and VIP charter, fire control, aerial application and specialist utility operations. Powered by two proven Allison 250-C20F engines, the AS355F1 combines operational flexibility with the added redundancy of twin-engine performance. With lifting capability up to 700 kg, the Twin Squirrel is an effective platform for precision aerial crane work in built-up and difficult-to-access areas, and can be configured for liquid and granular aerial application. For fire control operations, the aircraft supports air attack, crew transport and bucket operations, with programmable communications for incident management integration.

sales@mcdermottaviation.com
mcdermottaviation.com

SPEC SHEET

AS355 TWIN SQUIRREL

McDERMOTT AVIATION

Configured to carry four to six passengers, the AS355F1 provides a reliable and cost-effective platform for personnel transport, aerial survey and specialist operations across remote terrain and over-water environments. Selected aircraft within the McDermott Aviation fleet also offer premium VIP configurations, including air-conditioning, noise-cancelling headsets and upgraded interiors.

GENERAL CHARACTERISTICS

Crew	1 or 2
Passenger Capacity	4–6 passengers
Length	12.94 m (42 ft 5 in)
Height	2.94 m (9 ft 8 in)
Empty Weight	1,490 kg (3,285 lb)
Maximum Takeoff Weight (MTOW)	2,400 kg (5,291 lb)
Powerplant	2 × Allison C20F
Main Rotor Diameter	10.69 m (35 ft 1 in)
Main Rotor Area	89.75 m^2 (699 sq ft)

PERFORMANCE

Maximum Speed	278 km/h (172 mph; 150 kn)
Ferry Range	744 km (462 mi; 402 nmi)
Service Ceiling	3,400 m (11,150 ft)
Rate of Climb	6.5 m/s (1,280 ft/min)
Maximum Hook Load	1,400 kg (3,086 lb)

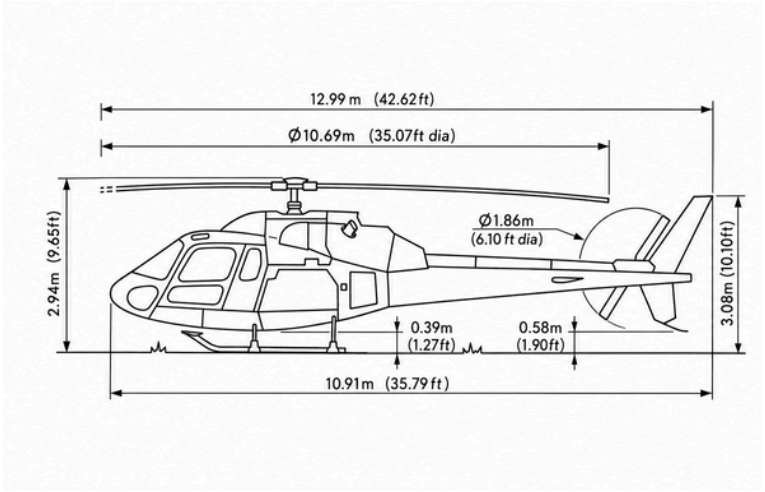

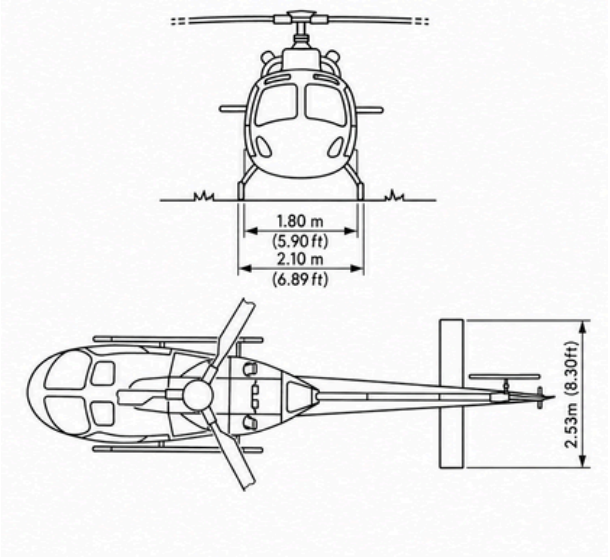

sales@mcdermottaviation.com
mcdermottaviation.com